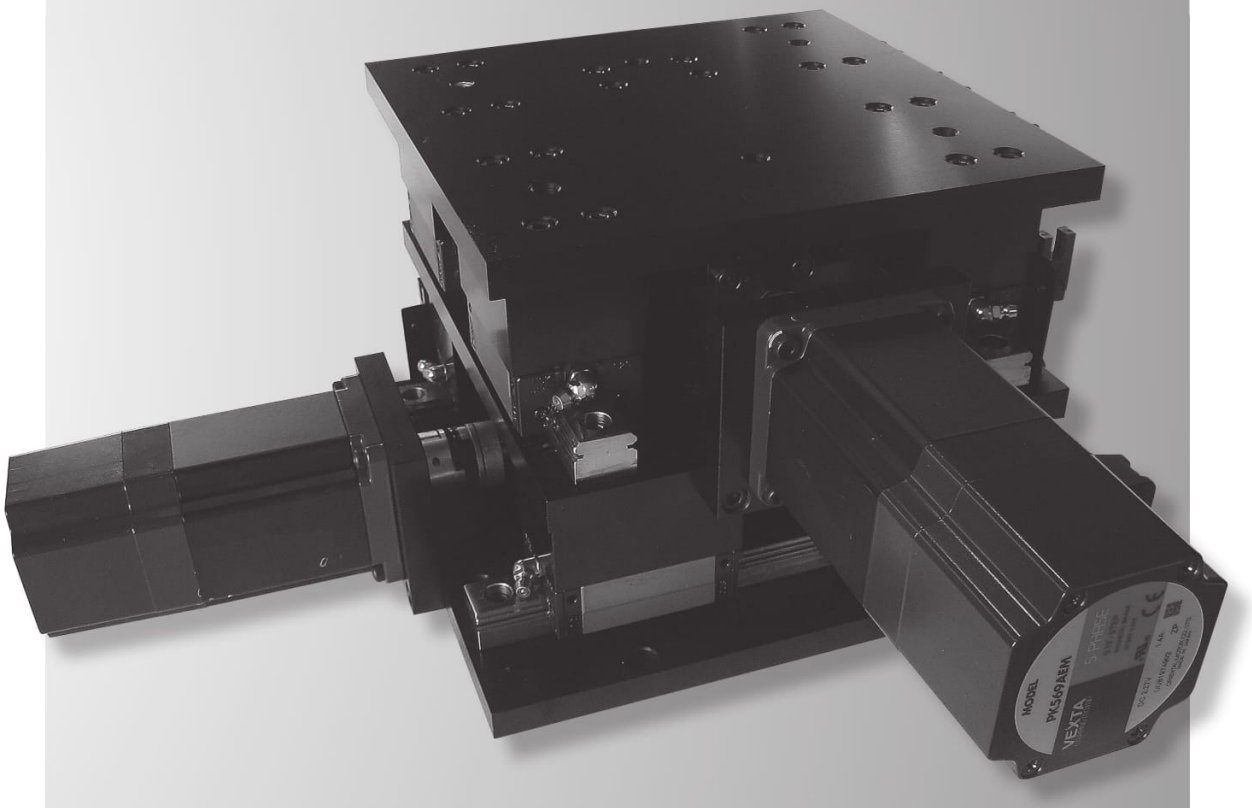
MODEL
PK569AEM
VEXTA