Stock No.583LM

Magnetic square precision level for LM guide

- These levels can be used to measure the squareness of devices with a linear-motion guideway.
- In the Y-axis direcition, a mini - level that is equivalent to JIS Grade A is mounted to read correctly.
- These levels have accuracy equivalent to JIS Grade A.

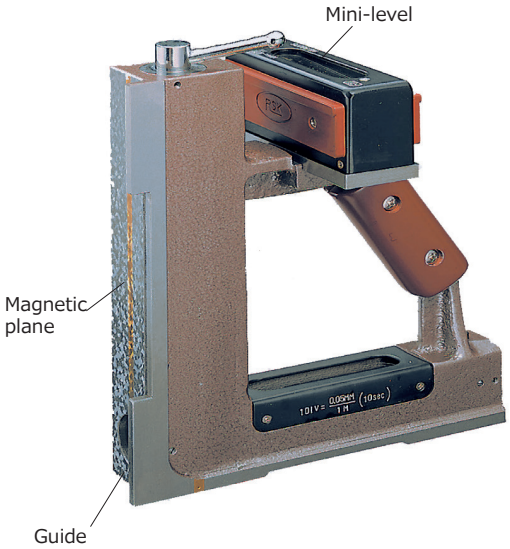

■ Dimensional drawing Unit : mm

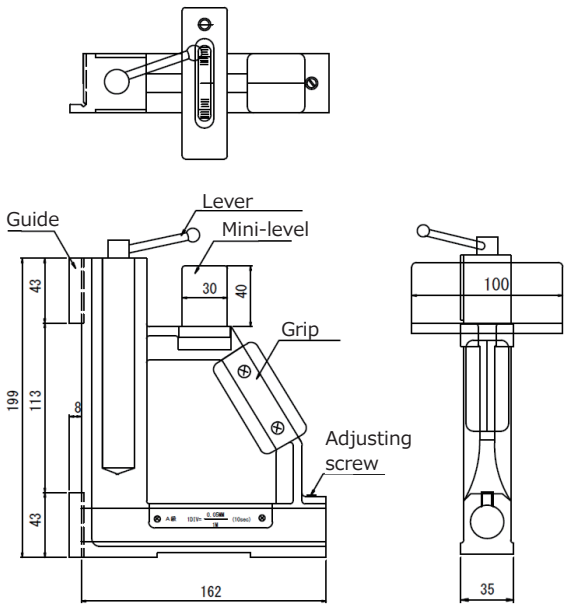

Features

- By applying the guide of the level to the side of a workpiece, the squareness can be measured correctly and easily.
- The magnetic plane is flat and does not have a V-groove to measure the squareness and straightness of devices with a linear-motion guideway.

* This level do not have an air chamber.

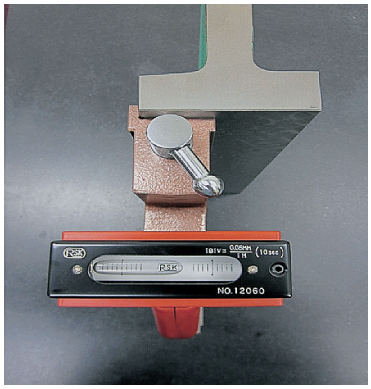

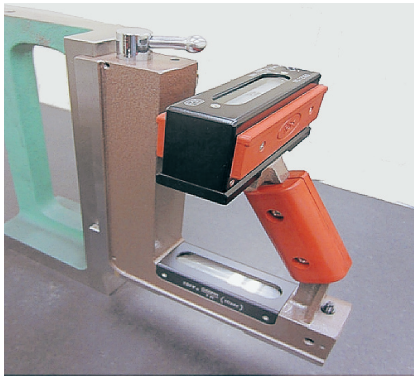

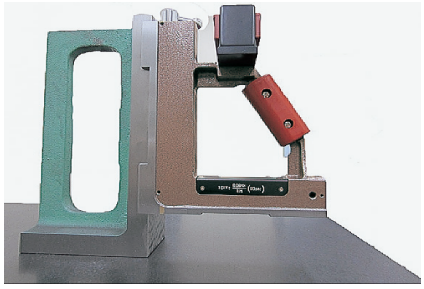

Configuration of stock number

583 – 150 2 LM

Sensitivity
2 → 0.02mm/m
5 → 0.05mm/m

Material : Cast iron(Bottom), S50C (Magnetic plane)
Package : Wooden box
Accessories : Hexagonal wrench,
Certificate of inspection, and Instruction manual

Product No	Stock No	Size (mm)	Sensivity (mm/m)	Squareness (±μm)	Weight (kg)
090-02-150	583-1502LM	150	0.02	2.2	3.4
090-05-150	583-1505LM		0.05	3.7	